19-1704; Rev 5; 1/09

Improved Precision Micropower Shunt Voltage Reference

General Description

The LM4041 is a precision two-terminal shunt mode, bandgap voltage reference with a fixed reverse breakdown voltage of 1.225V. Ideal for space-critical applications, the LM4041 is offered in the subminiature 3-pin SC70 surface-mount package (1.8mm × 1.8mm), 50% smaller than comparable devices in SOT23 surface-mount packages (SOT23 versions are also available).

Laser-trimmed resistors ensure precise initial accuracy. With a 100ppm/°C temperature coefficient, the device is offered in four grades of initial accuracy ranging from 0.1% to 1%. The LM4041 has a 60µA to 12mA shunt current capability with low dynamic impedance, ensuring stable reverse-breakdown voltage accuracy over a wide range of operating temperatures and currents.

The LM4041 does not require an external stabilizing capacitor while ensuring stability with any capacitive load.

The LM4041 is guaranteed over the temperature range -40°C to +125°C.

Applications

Portable, Battery-Powered Equipment

Notebook Computers

Cell Phones

Industrial Process Controls

Pin Configuration

TOP VIEW

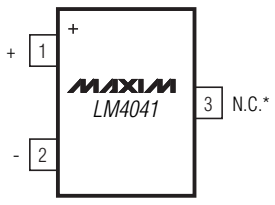

SC70-3/SOT23-3

*PIN 3 MUST BE LEFT FLOATING OR CONNECTED TO PIN 2.

Features

- **Ultra-Small 3-Pin SC70 Package**
- **0.1% (max) Initial Accuracy**
- **100ppm/°C (max) Temperature Coefficient Guaranteed over -40°C to +125°C Temperature Range**
- **Wide Operating Current Range: 60µA to 12mA**
- **Low 20µV_{RMS} Output Noise (10Hz to 10kHz)**
- **1.225V Fixed Reverse Breakdown Voltage**
- **No Output Capacitors Required**
- **Tolerates Capacitive Loads**

Ordering Information

PART	TEMP RANGE	PIN-PACKAGE	TOP MARK
LM4041AIX3-1.2+T	-40°C to +85°C	3 SC70-3	ABF
LM4041AIM3-1.2+T	-40°C to +85°C	3 SOT23-3	FZEB
LM4041AEX3-1.2+T	-40°C to +125°C	3 SC70-3	ALB
LM4041AEM3-1.2+T	-40°C to +125°C	3 SOT23-3	FZNC
LM4041BIX3-1.2+T	-40°C to +85°C	3 SC70-3	ABG
LM4041BIM3-1.2+T	-40°C to +85°C	3 SOT23-3	FZEC
LM4041BEX3-1.2+T	-40°C to +125°C	3 SC70-3	ALC
LM4041BEM3-1.2+T	-40°C to +125°C	3 SOT23-3	FZND
LM4041CIX3-1.2+T	-40°C to +85°C	3 SC70-3	ABH
LM4041CIM3-1.2+T	-40°C to +85°C	3 SOT23-3	FZED
LM4041CEX3-1.2+T	-40°C to +125°C	3 SC70-3	ALD
LM4041CEM3-1.2+T	-40°C to +125°C	3 SOT23-3	FZNE
LM4041DIX3-1.2+T	-40°C to +85°C	3 SC70-3	ABI
LM4041DIM3-1.2+T	-40°C to +85°C	3 SOT23-3	FZEE
LM4041DEX3-1.2+T	-40°C to +125°C	3 SC70-3	ALE
LM4041DEM3-1.2+T	-40°C to +125°C	3 SOT23-3	FZNF

Note: *For leaded version, contact factory.*
**See Selector Guide for a listing of LM4041 Output Voltage, Initial Accuracy, and Temperature Coefficient specifications.*
+Denotes a lead(Pb)-free/RoHS-compliant package.

Selector Guide

PART	INITIAL ACCURACY (%)	OUTPUT VOLTAGE (V)	TEMPCO (ppm/°C)
LM4041A___-1.2-T	0.1	1.225	100
LM4041B___-1.2-T	0.2	1.225	100
LM4041C___-1.2-T	0.5	1.225	100
LM4041D___-1.2-T	1.0	1.225	150

For pricing, delivery, and ordering information, please contact Maxim Direct at 1-888-629-4642, or visit Maxim's website at www.maxim-ic.com.

Improved Precision Micropower Shunt Voltage Reference

ABSOLUTE MAXIMUM RATINGS

Reverse Current (cathode to anode) 20mA
Forward Current (anode to cathode) 10mA
Continuous Power Dissipation (T_A = +70°C)
3-Pin SC70 (derate 2.17mW/°C above +70°C).....174mW
3-Pin SOT23 (derate 4.01mW/°C above +70°C).....320mW

Operating Temperature Range
LM4041_I_ _ _.....-40°C to +85°C
LM4041_E_ _ _ .....-40°C to +125°C
Storage Temperature Range .....-65°C to +150°C
Junction Temperature.....+150°C
Lead Temperature (soldering, 10s) .....+300° C

Stresses beyond those listed under "Absolute Maximum Ratings" may cause permanent damage to the device. These are stress ratings only, and functional operation of the device at these or any other conditions beyond those indicated in the operational sections of the specifications is not implied. Exposure to absolute maximum rating conditions for extended periods may affect device reliability.

ELECTRICAL CHARACTERISTICS

(I_R = 100µA, T_A = T_{MIN} to T_{MAX}, unless otherwise noted. Typical values are at T_A = +25°C.) (Note 1)

PARAMETER	SYMBOL	CONDITIONS		MIN	TYP	MAX	UNITS
Reverse Breakdown Voltage	V_R	T_A = +25°C	LM4041A (0.1%)	1.2238	1.2250	1.2262	V
			LM4041B (0.2%)	1.2226	1.2250	1.2275	
			LM4041C (0.5%)	1.2189	1.2250	1.2311	
			LM4041D (1.0%)	1.2128	1.2250	1.2373	
Reverse Breakdown Voltage Tolerance (Note 2)	ΔV_R		LM4041A (0.1%)		±1.2	±9.2	mV
			LM4041B (0.2%)		±2.4	±10.4	
			LM4041C (0.5%)		±6.0	±14	
			LM4041D (1.0%)		±12	±24	
Minimum Operating Current	I_{RMIN}		LM4041A/B/C		45	60	µA
			LM4041D		45	65	
Average Reverse Voltage Temperature Coefficient (Notes 2 and 3)	$\Delta V_R/\Delta T$	I_R = 10mA			±20		ppm/°C
		I_R = 1mA	LM4041A/B/C		±15	±100	
			LM4041D		±15	±150	
		I_R = 100µA			±15		
Reverse Breakdown Voltage Change with Operating Current Change	$\Delta V_R/\Delta I_R$	$I_{RMIN} \le I_R \le$ 1mA	LM4041A/B/C		0.7	1.5	mV
			LM4041D		0.7	2.0	
		1mA ≤ $I_R \le$ 12mA	LM4041A/B/C		2.5	8.0	
			LM4041D		2.5	10.0	
Reverse Dynamic Impedance (Note 3)	Z_R	I_R = 1mA, f = 120Hz, $I_{AC} = 0.1I_R$	LM4041A/B/C		0.5	1.5	Ω
			LM4041D		0.5	2.0	

ELECTRICAL CHARACTERISTICS (continued)

(I_R = 100µA, T_A = T_{MIN} to T_{MAX}, unless otherwise noted. Typical values are at T_A = +25°C.) (Note 1)

PARAMETER	SYMBOL	CONDITIONS	MIN	TYP	MAX	UNITS
Wideband Noise	e_N	I_R = 100µA, 10Hz ≤ f ≤ 10kHz		20		μV_{RMS}
Reverse Breakdown Voltage Long-Term Stability	ΔV_R	T = 1000h, I_R = 100µA		120		ppm

Note 1: All devices are 100% production tested at +25°C and are guaranteed by design for T_A = T_{MIN} to T_{MAX}, as specified.

Note 2: The overtemperature limit for Reverse Breakdown Voltage Tolerance is defined as the room-temperature Reverse Breakdown Voltage Tolerance ±[(ΔV_R / ΔT)(maxΔT)(V_R)], where ΔV_R / ΔT is the V_R temperature coefficient, maxΔT is the maximum difference in temperature from the reference point of +25°C to T_{MIN} or T_{MAX}, and V_R is the reverse breakdown voltage. The total overtemperature tolerance for the different grades in the temperature range where maxΔT = +65°C is shown below:
A grade: ±0.75% = ±0.1% ±100ppm/°C × 65°C
B grade: ±0.85% = ±0.2% ±100ppm/°C × 65°C
C grade: ±1.15% = ±0.5% ±100ppm/°C × 65°C
D grade: ±1.98% = ±1.0% ±150ppm/°C × 65°C
The total overtemperature tolerance for the different grades in the extended temperature range where maxΔT = +100°C is shown below:
A grade: ±1.1% = ±0.1% ±100ppm/°C × 100°C
B grade: ±1.2% = ±0.2% ±100ppm/°C × 100°C
C grade: ±1.5% = ±0.5% ±100ppm/°C × 100°C
D grade: ±2.5% = ±1.0% ±150ppm/°C × 100°C
Therefore, as an example, the A-grade LM4041-1.2 has an overtemperature reverse breakdown voltage tolerance of ±2.5V x 0.75% = ±19mV.

Note 3: Guaranteed by design.

Typical Operating Characteristics

(I_R = 100µA, SC70-3 package, T_A = +25°C, unless otherwise noted.)

REVERSE CHARACTERISTICS AND MINIMUM OPERATING CURRENT

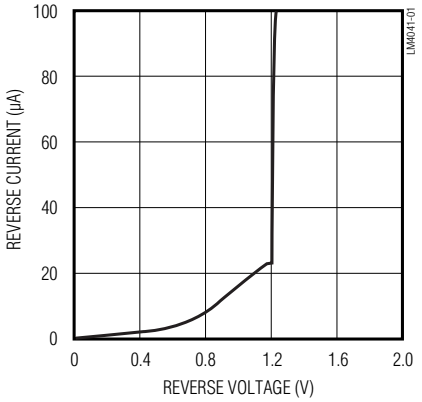

TEMPERATURE DRIFT

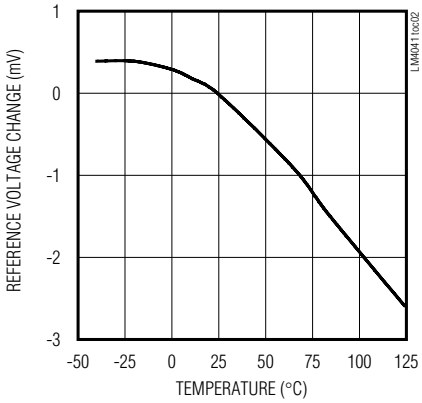

REVERSE VOLTAGE vs. CURRENT

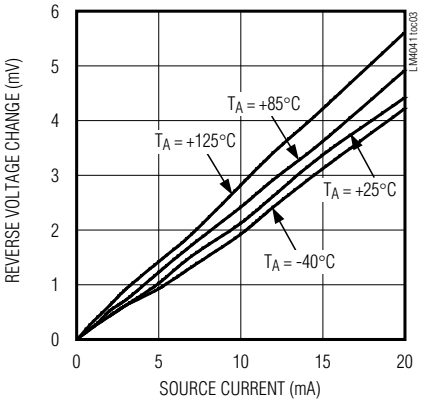

Improved Precision Micropower Shunt Voltage Reference

Typical Operating Characteristics (continued)

(I_R = 100µA, SC70-3 package, T_A = +25°C, unless otherwise noted.)

LOAD-TRANSIENT RESPONSE

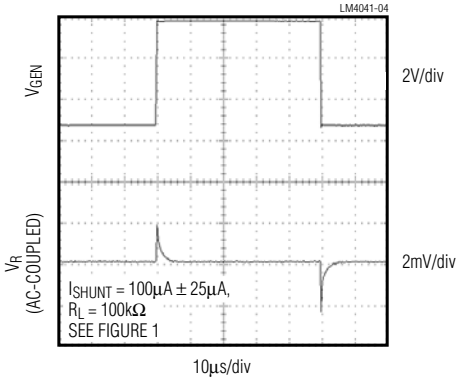

LOAD-TRANSIENT RESPONSE

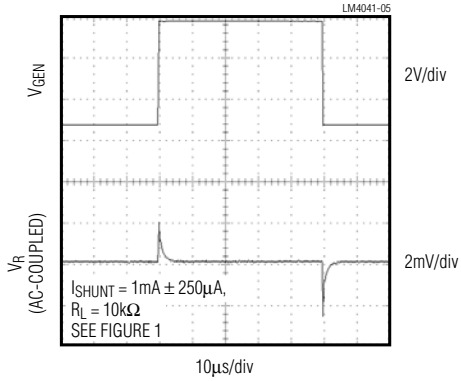

LOAD-TRANSIENT RESPONSE

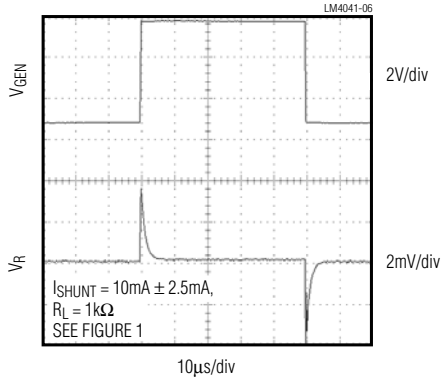

STARTUP CHARACTERISTICS

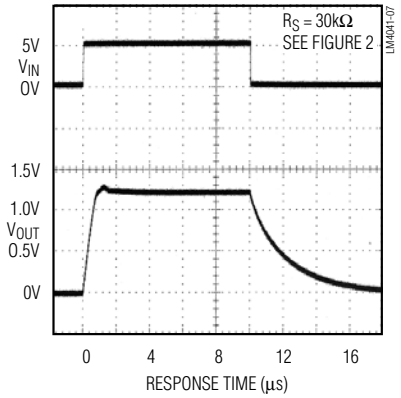

OUTPUT IMPEDANCE vs. FREQUENCY

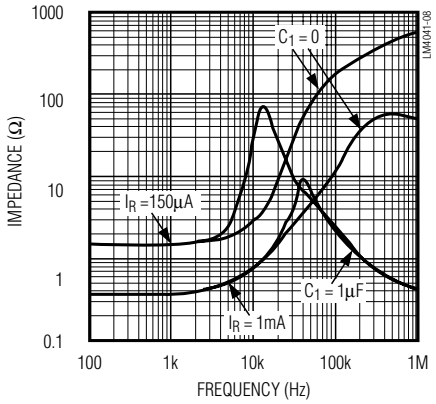

NOISE vs. FREQUENCY

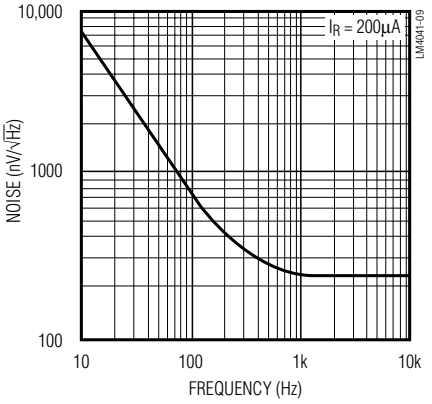

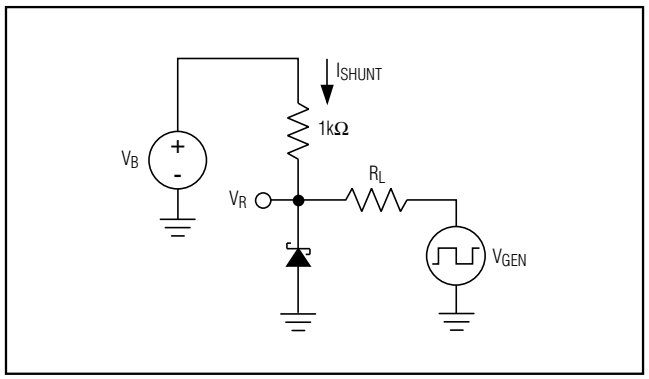

Figure 1. Load-Transient Test Circuit

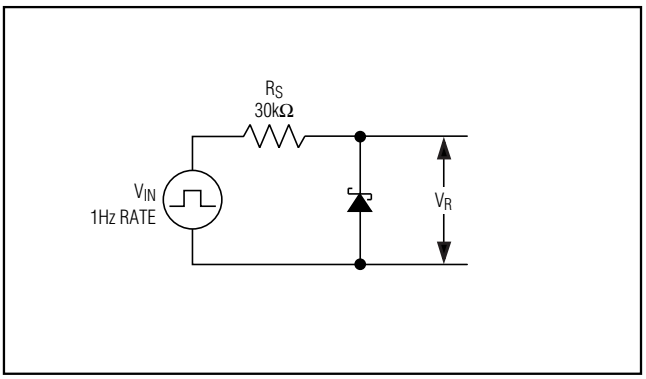

Figure 2. Startup Characteristics Test Circuit

Pin Description

PIN	NAME	FUNCTION
1	+	Positive Terminal of the Shunt Reference
2	–	Negative Terminal of the Shunt Reference
3	N.C.	Leave this pin unconnected, or connect to pin 2.

Detailed Description

The LM4041 shunt references use the bandgap principle to produce a stable, accurate voltage. The device behaves similarly to an ideal zener diode; a fixed voltage of +1.225V is maintained across its output terminals when biased with 60µA to 12mA of reverse current. The LM4041 behaves similarly to a silicon diode when biased with forward currents up 10mA.

Figure 3 shows a typical operating circuit. The LM4041 is ideal for providing a stable reference from a high-voltage power supply.

Applications Information

The LM4041's internal pass transistor is used to maintain a constant output voltage (V_{SHUNT}) by sinking the necessary amount of current across a source resistor. The source resistance (R_S) is determined from the load current (I_{LOAD}) range, supply voltage (V_S) variations, V_{SHUNT}, and desired quiescent current.

Choose the value of R_S when V_S is at a minimum and I_{LOAD} is at a maximum. Maintain a minimum I_{SHUNT} of 60µA at all times. The R_S value should be large enough to keep I_{SHUNT} less than 12mA for proper regulation when V_S is maximum and I_{LOAD} is at a minimum. To prevent damage to the device, I_{SHUNT} should never exceed 20mA.

Therefore, the value of R_S is bounded by the following equation:

$$[V_{S(MIN)} - V_R] / [60\mu A + I_{LOAD(MAX)}] > R_S > [V_{S(MAX)} - V_R] / [20mA + I_{LOAD(MIN)}]$$

Choosing a larger resistance minimizes the total power dissipation in the circuit by reducing the shunt current ($P_{D(TOTAL)} = V_S \times I_{SHUNT}$). Provide a safety margin to incorporate the worst-case tolerance of the resistor used. Ensure that the resistor's power rating is adequate, using the following general power equation:

$$P_R = I_{SHUNT} \times (V_{S(MAX)} - V_R)$$

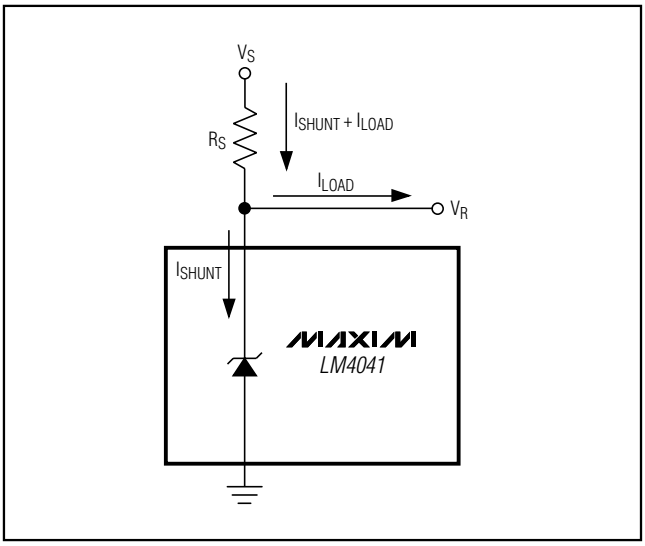

Figure 3. Typical Operating Circuit

Output Capacitance

The LM4041 does not require an external capacitor for frequency stability and is stable for any output capacitance.

Temperature Performance

The LM4041 typically exhibits an output voltage temperature coefficient within ±15ppm/°C. The polarity of the temperature coefficient may be different from one device to another; some may have positive coefficients, and others may have negative coefficients.

Improved Precision Micropower Shunt Voltage Reference

High Temperature Operation

The maximum junction temperature of the LM4041 is +150°C. The maximum operating temperature for the LM4041_E_ is +125°C. At a maximum load current of 15mA and a maximum output voltage of 5V, the part will dissipate 75mW of power. The power dissipation limits of the 3-pin SC70 call for a derating value of 2.17mW/°C above +70°C and thus for 75mW of power dissipation, the part will selfheat to 35.56°C above ambient temperature. If the ambient temperature is +125°C, the part operates at 159.56°C, thereby exceeding the maximum junction temperature value of +150°C. For high-temperature operation, care must be taken to ensure the combination of ambient temperature, output power dissipation, and package thermal resistance does not conspire to raise the device temperature beyond that listed in the *Absolute Maximum Ratings*. Either reduce the output load current or the ambient temperature to keep the part within the limits.

Chip Information

TRANSISTOR COUNT: 60

PROCESS: BiCMOS

Package Information

For the latest package outline information and land patterns, go to **www.maxim-ic.com/packages**. Note that a "+", "#", or "-" in the package code indicates RoHS status only. Package drawings may show a different suffix character, but the drawing pertains to the package regardless of RoHS status.

PACKAGE TYPE	PACKAGE CODE	DOCUMENT NO.
3 SC70-3	X3-2	**21-0075**
3 SOT23-3	U3-1	**21-0051**

Revision History

REVISION NUMBER	REVISION DATE	DESCRIPTION	PAGES CHANGED
5	1/09	Changed part numbers to indicate lead-free	1

Maxim cannot assume responsibility for use of any circuitry other than circuitry entirely embodied in a Maxim product. No circuit patent licenses are implied. Maxim reserves the right to change the circuitry and specifications without notice at any time.

© 2010 Maxim Integrated Products Maxim is a registered trademark of Maxim Integrated Products, Inc.